Cllena

Installation Steps and Notes

*** Please read these instructions completely prior to installation**

Warning:

- Keep good air convection.
- Batteries produce explosive gases – Ensure no sparks or flames are present.
- Follow all vehicle manufacturer's instructions.
- Beware of moving parts.
- Input power should be lead acid battery or lithium battery.
- This converter can't charge the battery.
- Please install correct fuse in input cable.
- Don't connect Negative or GND to vehicle case or chassis.
- Never connect the converter to a solar panel or wind turbine. That will burn the converter.
- Be sure of the correct polarity of input and output connection, never reverse the polarity, or it burns the converter.
- Please choose copper and big wire to avoid voltage drop, the input and output wire should be less 2m; If long wire, then bigger wire required. For terminal type converters, the terminal lugs for wires are necessary.
- Please don't install any meters between converter to battery and converter to loads.

Reminder:

- When in doubt, the larger current converter is always a better choice.
- It's a normal spark when you connect the converter to the battery.
- It's normal that the case is hot and when it's over 185℉, the converter protects.
- When the temperature is over 113℉, you touch any mental case and will feel very hot. This case will be over 113℉ and it's normal.
- It's is necessary to insert a fuse or DC circuit breaker in input line.

Installation steps:

1. Turn off all power and load.
2. Connect: INPUT+ to BAT+, INPUT-(GND) to BAT-; OUTPUT+ to LOAD+, OUTPUT-(GND) to LOAD-;
3. Insert Fuse or DC Circuit Breaker in input side.
4. Check all polarity, ensure correctness.
5. Turn on power and converter works.
Note: Never reverse the polarity or it damages your fuses or converter.

Contact:

Any question, feel free to contact us by email and we will reach you at the soonest.
If you like our products or services, please give a good review.
For more products, please visit our store.
Search Cllena directly on Amazon, or visit our web site: https://www.amazon.com/cllena

Email: cllena@qq.com
Thank you very much.

Wiring Diagram without ACC

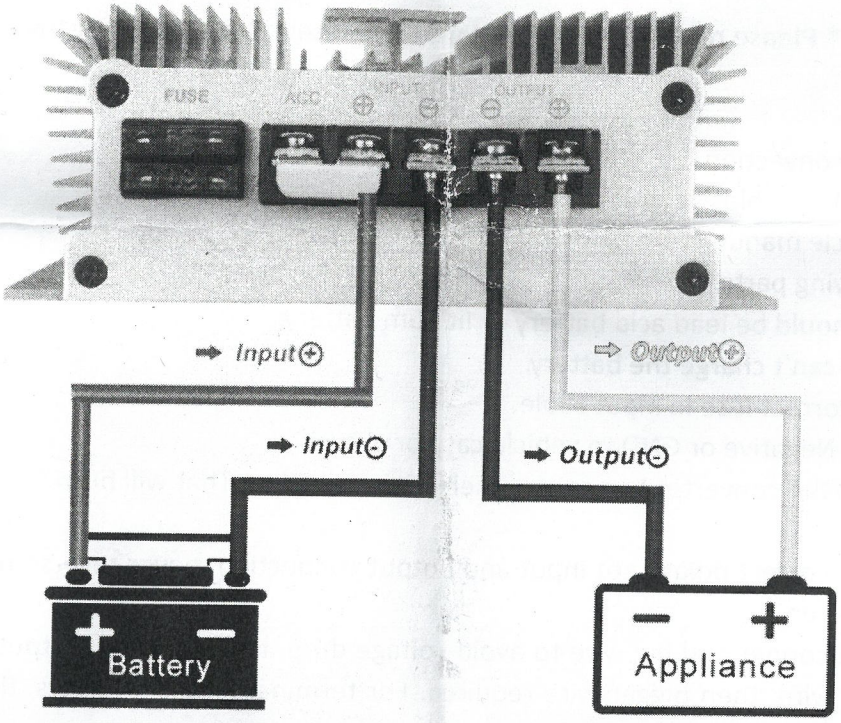
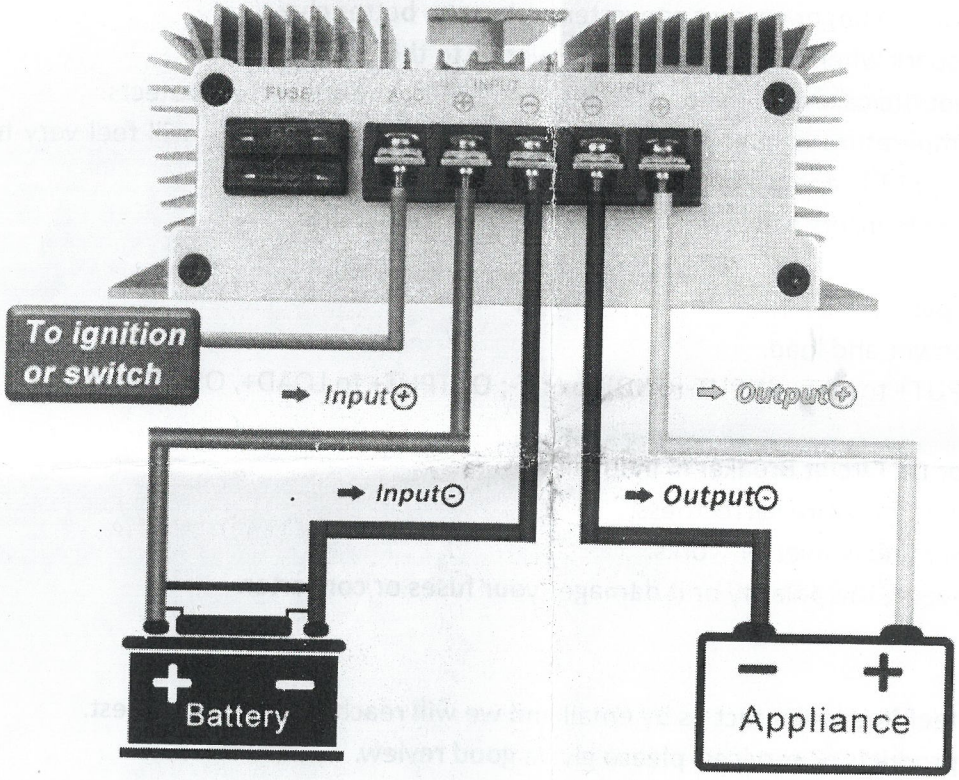
Wiring Diagram with ACC